# 750-538

## 2-Channel Relay Output Module 100 V AC, 30 V DC, Ex i

**Isolated outputs; 2 changeover contacts**

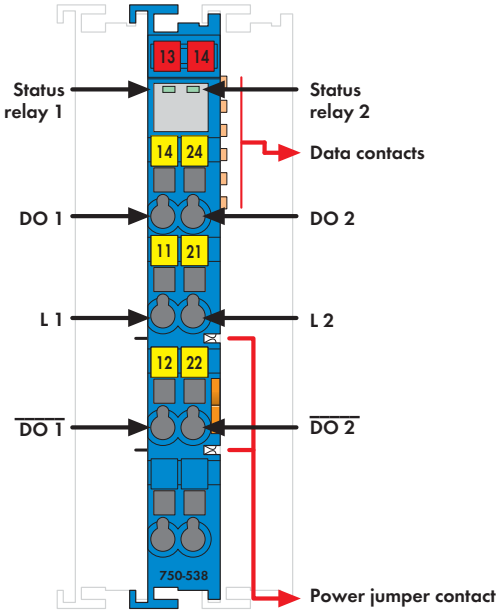


**Delivered without miniature WSB markers**

The digital output module switches intrinsically safe circuits of Zone 0+1 (e.g., magnetic valves, contactors, optical/acoustic encoders).
The internal system voltage triggers the relay.
Both maximum switching current and voltage must comply with EN 60079-11.
The switched status of the relays is shown by a LED.
The NO contacts are electrically isolated.
The WAGO-I/O-SYSTEM 750 must be installed either in Zone 2 or in a non-hazardous area.

**Note:** The digital output module must only be operated via Ex i 24VDC power supply!

General information (e.g., installation regulations) on explosion protection is available in the WAGO-I/O-SYSTEM 750 manuals!

| Description | Item No. | Pack. Unit |
|---|---|---|
| **2DO RELAY Ex i** | **750-538** | 1 |

| Accessories | | Item No. | Pack. Unit |
|---|---|---|---|
| **Miniature WSB Quick marking system** | | | |
| | plain | **248-501** | 5 |
| | with marking | see Section 11 | |

| Technical Data | |
|---|---|
| No. of outputs | 2 changeover contacts |
| Current consumption, system voltage typ. | |
| (5 VDC) | 26 mA |
| Voltage via power jumper contacts | 24 V DC (provided via Ex-i supply |
| | $U_O$ = max. 27.3 V) |
| Type of load | resistive, inductive, lamps |
| Max. switching frequency | 20/min |
| Max. switching voltage | 100 V AC / 30 V DC |
| Max. switching current | 0.5 A AC / 1 A DC |
| Min. switching current | 0.01 mA / 10 mV DC |
| Switching power | 50 VA / 30 W |
| Pull-in time (max.) | 4 ms |
| Drop-out time (max.) | 4 ms |
| Contact material | Silver alloy, gold-plated |
| Mechanical life (min.) | 1 x $10^8$ switching operations |
| Electrical life (min.) | 1 x $10^5$ (0.5 A / 100 V AC) |
| | 2 x $10^5$ (1 A / 30 V DC) |
| Isolation | $V_M$ = 375 V system/supply |
| Power consumption $P_{max.}$ | 0.8 W |
| Power loss $P_V$ | 0.8 W |
| Bit width | 2 bits (status) |

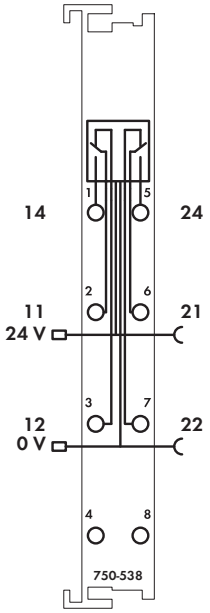


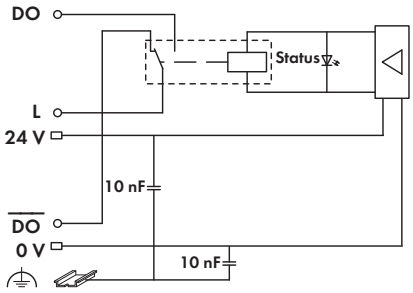


## Technical Data

| | |
|---|---|
| Wire connection | CAGE CLAMP® |
| Cross sections | 0.08 mm² ... 2.5 mm² / AWG 28 ... 14 |
| Strip lengths | 8 ... 9 mm / 0.33 in |
| Width | 12 mm |
| Weight | 51 g |
| EMC immunity of interference | acc. to EN 61000-6-2, marine applications |
| EMC emission of interference | acc. to EN 61000-6-3, marine applications |

## Explosion Protection

| | |
|---|---|
| Electric circuit, safety-relevant data | **Relay output:** |
| | $U_i$ = 30 V DC; $I_i$ = 1 A; $P_i$ = 30 W; |
| | $U_i$ = 100 V AC; $I_i$ = 0.5 A; $P_i$ = 50 VA; |
| | $L_i$ = negligible; |
| | $C_i$ = negligible |

Both maximum switching current and voltage must comply with EN 60079-11

## Standards, Guidelines and Approvals

| | |
|---|---|
| Conformity marking | CE |
| ATEX Guideline 2014/34/EU | EN 60079-0, -7, -11, -26, -31 |
| EC EMC guideline 2014/30/EU | |
| Marine applications | GL |
| | |
| E175199 Ordinary Locations | |
| TÜV 12 ATEX 106032 X | I M2 (M1) Ex d [ia Ma] I Mb, |
| | II 3 (1) G Ex ec [ia Ga] IIC T4 Gc, |
| | II 3 (1) D Ex tc [ia Da] IIIC T135°C Dc |
| IECEx TUN 12.0039 X | Ex d [ia Ma] I Mb, |
| | Ex ec [ia Ga] IIC T4 Gc, |
| | Ex tc [ia Da] IIIC T135°C Dc |
| UL E480271 Hazardous Locations | Cl I Zn 2 AEx nA [ia Ga] IIC T4 Gc |
| (Zone classified) | Cl I Zn 2 AEx nA [ia IIIC] IIC T4 Gc |
| | Ex nA [ia Ga] IIC T4 Gc X |
| | Ex nA [ia IIIC] IIC T4 Gc X |
| UL E198726 Hazardous Locations | Class I, Div. 2, Group A B C D, T4 |
| (Division classified) | |